Installation Instructions

XVision® HUD Maintenance Kits Piece Nos. 801154, 801490, 801497, 5010081, 5010082, 5010247, 5010249 & 5010524

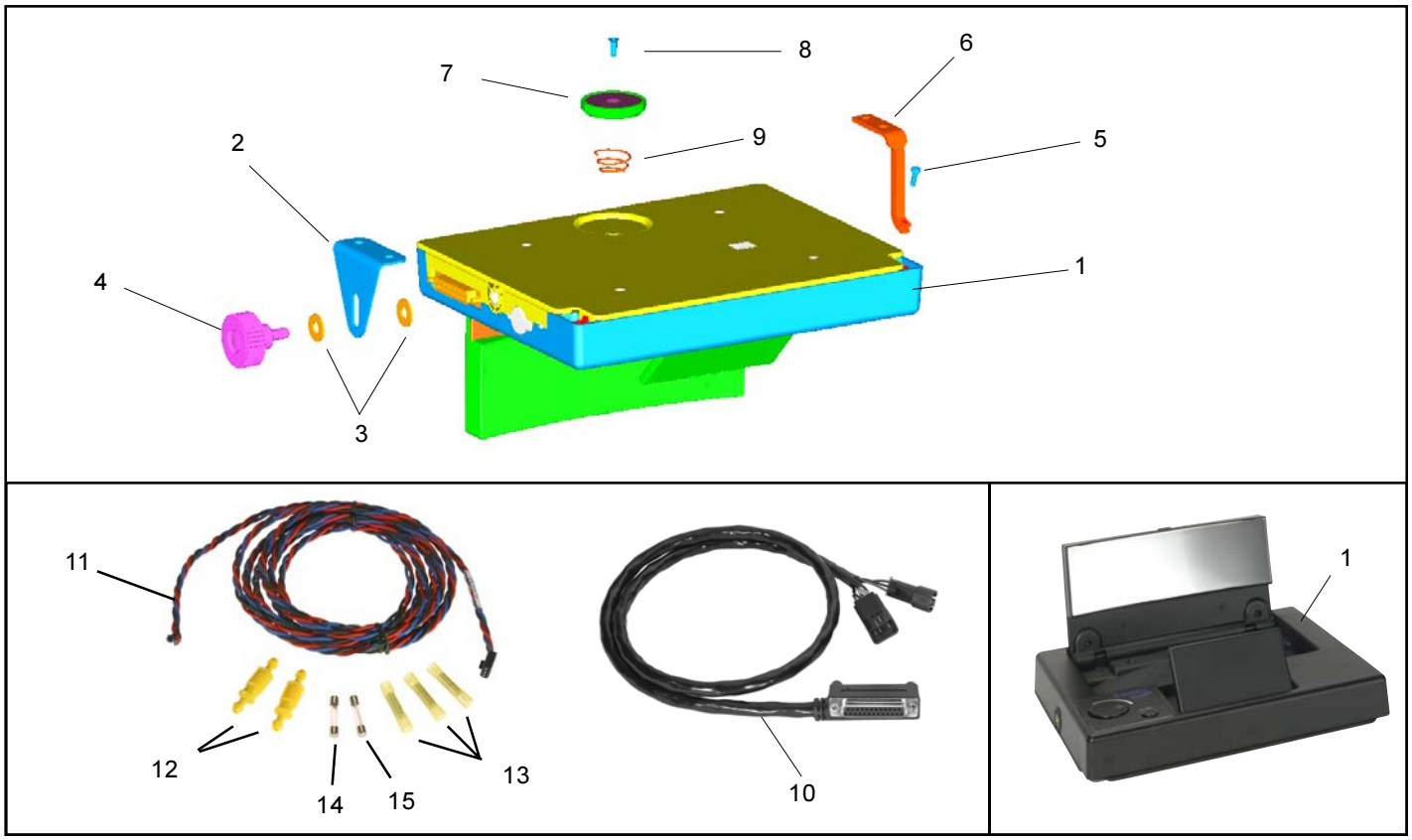

Figure 1 XVision® HUD Kits

CB Mounting Kit Piece Number 801490 consists of the following:

Item	Description	Qty
1	**Video Display Pc. No. 801154**	1
-	**CB Mtg. Kit Pc. No. 5010081**	1
2	Mounting Bracket	1
16	#10 Plastite Screw 1/2" (NS)	4
-	**Knob Kit Pc. No. 5010247**	1
3	1/4" Flat Washer	4
4	1/4"-20 Threaded Knob	2
10	Display Harness	1
-	**Vehicle Harness Kit Pc. No. 801487**	1
11	Vehicle Harness	1
12	Fuse Holder	2
13	Butt Splice	3
14	1 Amp Fuse	1
15	3 Amp Fuse	1

Items 16-24 are Not Shown (NS)

DESCRIPTION

This instruction sheet is used to service all of the Bendix® XVision® Head-up-Display (HUD) display kits shown on this page. Kits are identified in **bold** type.

HUD Overhead Mounting Kit Piece Number 801497 consists of the following:

Item	Description	Qty
10	Display Harness	1
-	**Friction Hinge Mtg. Kit Pc. No. 5010082**	1
5	#4 Threadroll Screw	2
6	Friction Hinge Support	2
-	**Screw & Shim Kit Pc. No. 5010249**	1
17	Shim (NS)	12
18	#10-14 Plastite® Screw 1/2" (NS)	4
19	#10-14 Plastite® Screw 3/4" (NS)	4
20	#10-14 Plastite® Screw 1" (NS)	4
-	**Magnet Kit Pc. No. 5010524**	1
7	Magnet	1
21	Flat Washer (NS)	1
8	#6-19 Plastite Screw 3/8"	1
22	Striker (NS)	1
23	#8-16 Plastite Screw (NS)	1
24	Flat Head Screws 1/2" (NS)	1
	Flat Head Screw 3/4" (NS)	1
	Flat Head Screw 1" (NS)	1
9	Conical Spring	1

IMPORTANT! PLEASE READ AND FOLLOW THESE INSTRUCTIONS TO AVOID PERSONAL INJURY OR DEATH:

When working on or around a vehicle, the following general precautions should be observed at all times.

1. **Park the vehicle on a level surface, apply the parking brakes, and always block the wheels.**
2. **Stop the engine when working around the vehicle.**
3. **If the vehicle is equipped with air brakes, make certain to drain the air pressure from all reservoirs before beginning ANY work on the vehicle.**
4. **Following the vehicle manufacturer's recommended procedures, deactivate the electrical system in manner that removes all electrical power from the vehicle.**
5. **When working in the engine compartment the engine should be shut off. Where circumstances require that the engine be in operation, EXTREME CAUTION should be used to prevent personal injury resulting from contact with moving, rotating, leaking, heated, or electrically charged components.**
6. **Never connect or disconnect a hose or line containing pressure; it may whip. Never remove a component or plug unless you are certain all system pressure has been depleted.**
7. **Never exceed recommended pressures and always wear safety glasses.**
8. **Do not attempt to install, remove, disassemble or assemble a component until you have read and thoroughly understand the recommended procedures. Use only the proper tools and observe all precautions pertaining to use of those tools.**
9. **Use only genuine Bendix replacement parts, components, and kits. Replacement hardware, tubing, hose, fittings, etc. should be of equivalent size, type, and strength as original equipment and be designed specifically for such applications and systems.**
10. **Components with stripped threads or damaged parts should be replaced rather than repaired. Repairs requiring machining or welding should not be attempted unless specifically approved and stated by the vehicle or component manufacturer.**
11. **Prior to returning the vehicle to service, make certain all components and systems are restored to their proper operating condition.**

PRELIMINARY CONSIDERATIONS

The HUD installation will differ from cab to cab. To achieve the best installation, first consider where to install the HUD and also how to route the harnesses.

The display can be mounted in four ways (see Figures 2-5):

Friction Hinge Mount (Visor) - the display pivots on a pair of friction hinges (similar to a vehicle sun visor). The friction hinge mount allows for the sun visor to be used during the day and the XVision® System to be used during the night. See Figure 2.

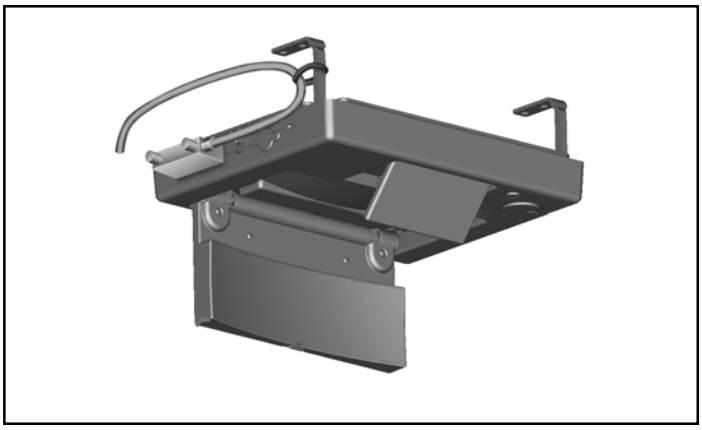

Figure 2 Friction Hinge Mount (Visor)

CB Mount (Overhead) - the display is mounted above the driver's head in the headliner area (head-up). See Figure 3.

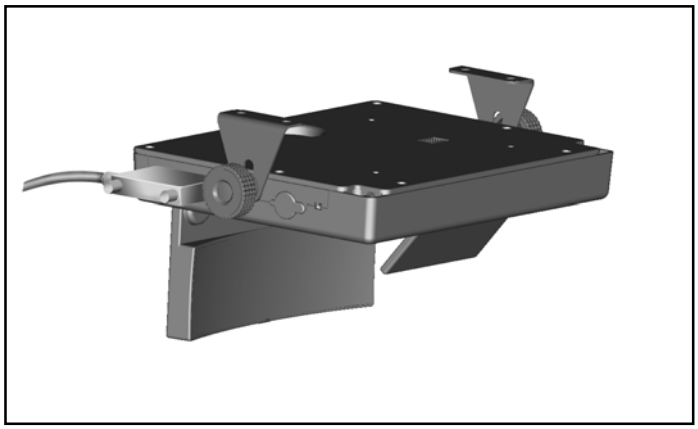

Figure 3 CB Mount (Overhead)

CB Mount (Dashboard) - the display is mounted on the vehicle dashboard (head-down). See Figure 4.

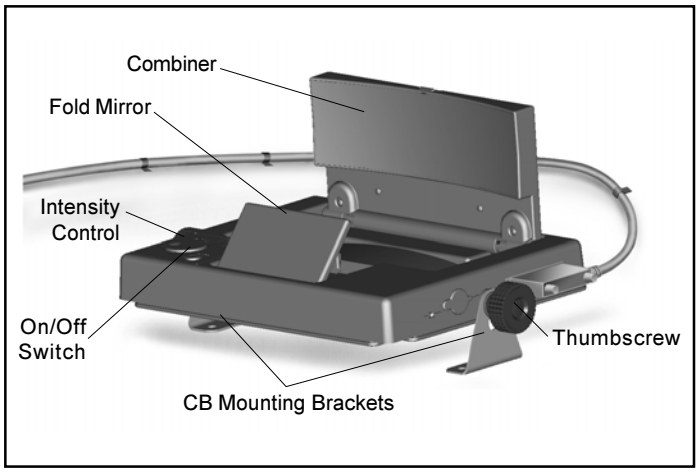

Figure 4 CB Mount (Dashboard)

Base #8-32 - the display is recessed, or custom-mounted. See Figure 5.

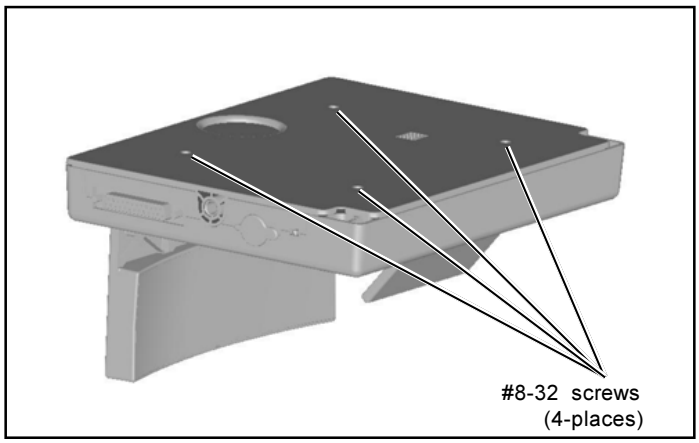

Figure 5 Base #8-32 Mount

OVERVIEW

Prior to installation, spend time exploring the cab of your vehicle and experimenting with different mounts for your display. Please use the following guidelines to optimize your installation.

Height of driver and preferred seat position

These variables will determine if an overhead mount can be used. The display should be mounted so that the combiner is approximately 20 in. from the driver's eye and in his/her peripheral vision to minimize head movement. Ideal overhead mounting conditions should result in a look-up angle of 6 to 24 degrees. See Figure 6.

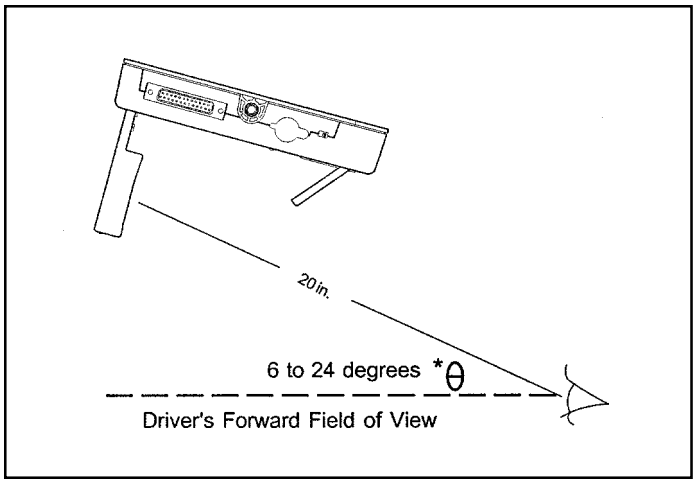

Figure 6 Optimal Overhead Mount Sight Distance
* The smaller the angle between the driver's forward field of view and line of sight to the combiner, the better the results.

Width of dashboard and steering wheel position

To use the CB mount (dashboard), there must be room on the dashboard to install the display so that the combiner does not contact the windshield or block the windshield defrosters. The display must also be positioned so that it does not interfere with the driver's ability to turn the steering wheel or pinch fingers when using the steering wheel. When mounting, make sure the display is in line with and square to the driver. See Figure 7.

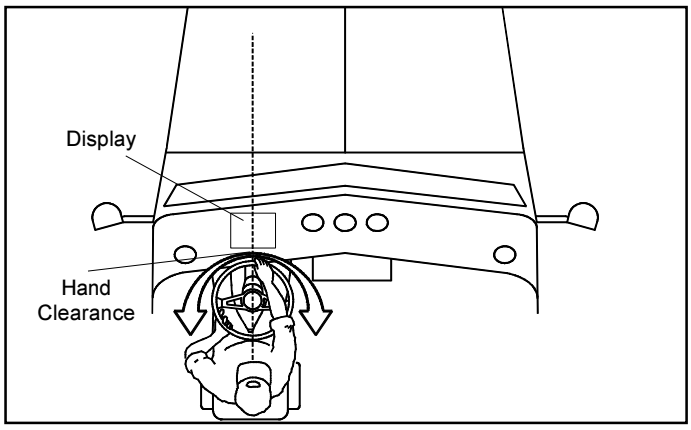

Figure 7 CB Mount (Dashboard) Considerations

Visor width and thickness

In order to use the friction hinge mount (visor), the display should not interfere with the visor or its storage, and should be mounted approximately 20 in. from the driver's eyes. See Figures 8 and 9. Additionally, to use the friction hinge mount (visor), be sure that the display is square to the driver, not the headliner of the cab.

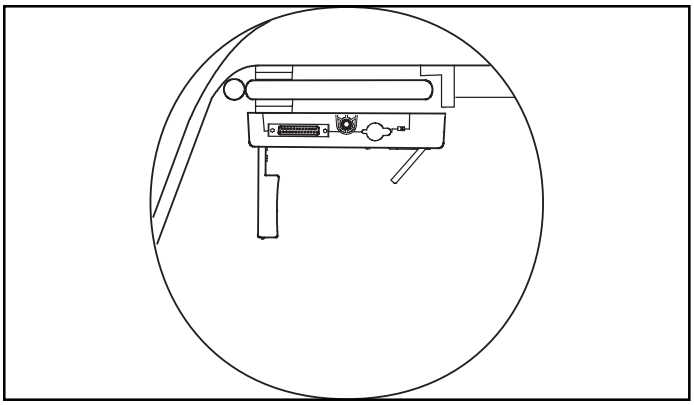

Figure 8 Friction Hinge Mount; Display is in use (night-time driving).

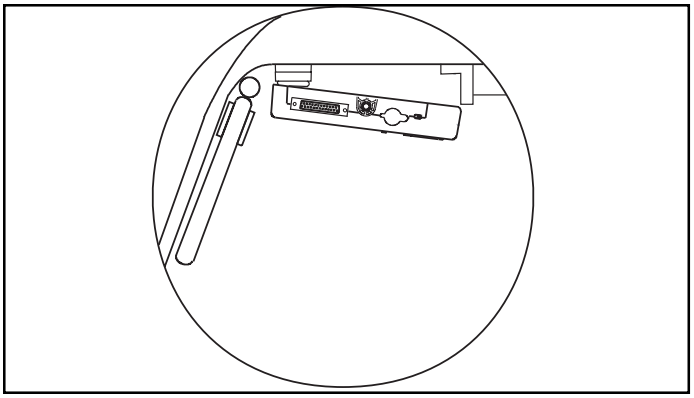

Figure 9 Friction Hinge Mount; Visor is in use (day-time driving).

Size of cab

To use the CB mount (overhead), the cab must be tall enough and wide enough to allow for the display to be suspended approximately 20 in. in front of the driver's eyes. The display must not interfere with other truck fixtures (curtain rod, light fixtures, etc.)

PREPARE FOR INSTALLATION

CHOOSE THE DISPLAY LOCATION

Based on the factors described in **Preliminary Considerations** on pages 2-3 and the limitations of your cab, decide if you will mount your XVision® night vision system overhead or on your dashboard.

CONFIGURE THE DIP SWITCH

The orientation of the virtual image on the display will depend on the display location that you have chosen. There are four DIP switches which allow you to "flip" the virtual image so that it will be displayed correctly on your display. The notebook will arrive with the DIP switches configured for the overhead or visor display location, as illustrated in Table 1. Figure 10 references the position of the DIP switches would be in if the display is dash mounted. The DIP switches are located on the mounting side of the display, under a switch cover. See Figure 10.

1. Slide the switch cover in the direction away from the 25-pin connector to expose the DIP switches.
2. Set the DIP switches according to the options in Table 1.

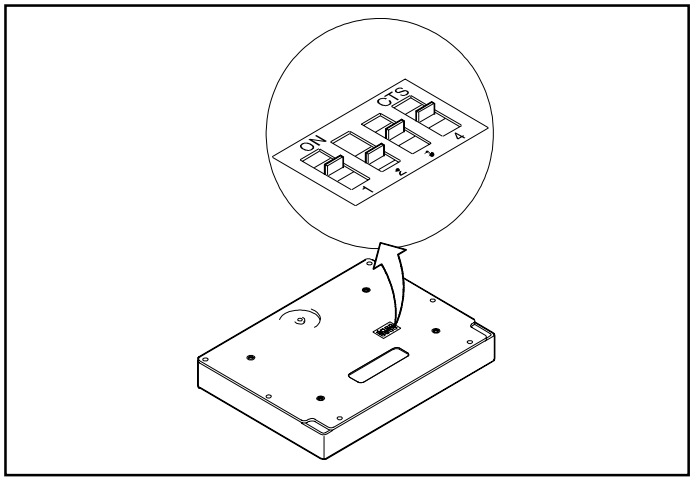

Figure 10 DIP Switches - Dash Mounted

Table 1 DIP Switch Positions

Mounting Position	DIP Switch Positions			
	1	2	3	4
Dash Mounted (NTSC)	N/A	OFF	ON	ON
Overhead Mounted (NTSC)	N/A	OFF	OFF	OFF

CHOOSE THE MOUNT

Choose one of the following mounts and follow the installation instructions provided for that mount.

CB mount (Dashboard) Page 4
CB mount (Overhead) Page 6
Friction hinge mount (Visor) Page 7
Base mount Page 8

After installing your particular mount, go to Connecting the Harnesses on page 9.

INSTALL THE CB MOUNT (DASHBOARD)

Some dashboard installations result in a 30 to 40 in. distance from the driver's eyes. At distances over 20 in., the driver may have to move his or her head to view complete virtual images on the combiner.

INSTALLATION TIP: The IR sensor (camera) and wiring should be routed away from any onboard communication system radio antenna and associated wiring. This includes CBs (Citizen Band Radios), Amateur Radio, or commercial two-way radios. To minimize possible interference from communication system transmission, locate the camera the furthest distance possible from any antenna. Likewise, route XVision® camera wiring away from CB antenna wires to minimize cross talk.

NOTE: The CB Mount installation instructions include the use of a CB Mount template. However, the template is only designed to be used when mounting the bracket feet so they face each other. The bracket feet can also be installed pointing outward, away from one another. If you choose to mount the feet outward, do not use the CB Mount template. Follow all of the steps below, but disregard the references to the template. Before using the template be sure to check the template for size accuracy. Copying the template can cause size discrepancies

POSITION THE DISPLAY

1. Following proper safety guidelines, start the vehicle and build the system air pressure. Be sure the seat is properly adjusted for the driver.
2. With the driver seated, determine a location on the dashboard where the display will not disturb the driver's sight or normal operation of the vehicle. Be sure to have the combiner open to ensure clearance by the windshield.
3. Place the display in the chosen location and draw a line on the dashboard indicating the front of the display.
4. Establish the driver's centerline of sight. See Figure 11.

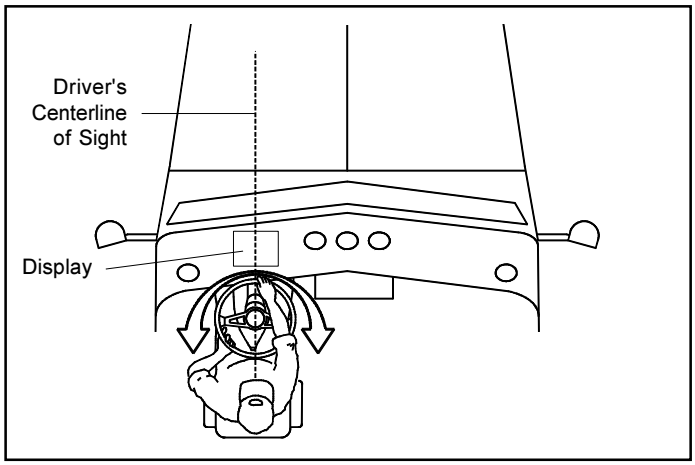

Figure 11 Driver's Centerline of Sight

NOTE: Sometimes the center of the steering wheel is also the centerline of the driver. If the center of the steering wheel is not the "true" centerline of the driver, use the center of the driver's seat as the driver's centerline.

5. Transfer the driver's centerline to the dash, where the display will be mounted.

   NOTE: The centerlines of the driver and of the display should line up.

6. Tape the CB mount template to the dashboard.

   NOTE: Align the CB Mount (dashboard) template with the lines that were drawn on the dash. Make sure the template is square to the driver, not the dashboard. See the CB mount template on page 11.

MOUNT THE DISPLAY

1. Center punch the four holes of the template.
2. Remove the CB mount template.
3. Inspect the area under the dashboard for electrical wires, tubing, or instruments.
4. Drill four 11/64 in. holes in the dashboard.
5. Place the CB mounting brackets(2) over the holes.
6. Secure the CB mounting brackets(2) with the four #10 Plastite® screws(16) provided in the kit.
7. Torque the screws to approximately 20 in-lbs.

   NOTE: The torque of the screws depends on the composition and thickness of your dashboard. If your truck does not have a plastic dashboard, substitute metal machine screws for the Plastite® screws. If the thickness of the dashboard is less than 1/8 in., you will need to use additional mounting material or another method of fastening.

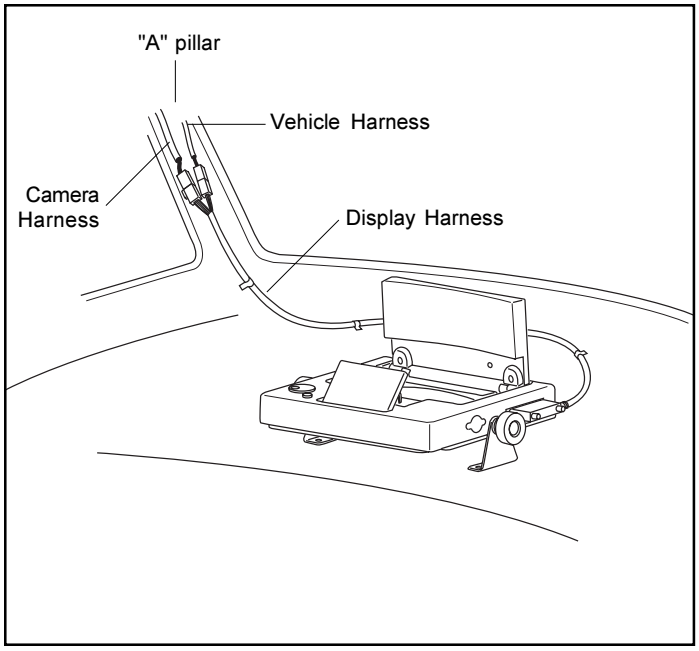

Figure 12 CB Mount (Dashboard) Installed

CB MOUNT (DASHBOARD) CONT'D

INSTALL THE KNOB AND WASHER ASSEMBLY

There are four 1/4" stainless steel washers(3) in the knob kit. These should be installed on the inner and outer sides of the standoff of each bracket.

1. Slide one of the washers(3) onto one of the threaded knobs(4).
2. Hold one washer(3) between the display(1) and the mounting bracket(2) while threading the washer/knob assembly from the outside of the bracket. Refer to Figure 13.
3. Repeat steps 1 and 2 for the other bracket.
4. Hand-tighten the knobs until they are snug.

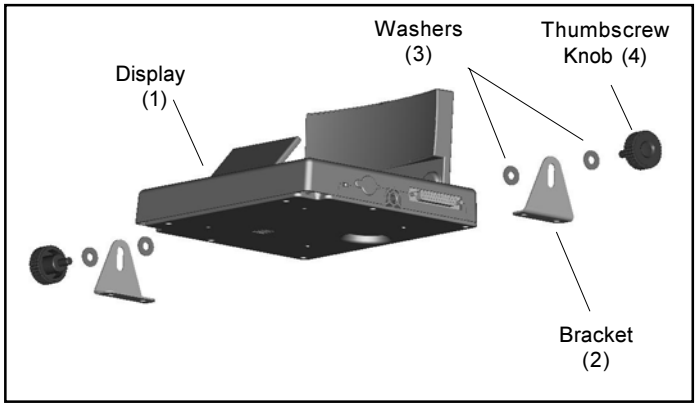

Figure 13 Knob and Washer Assembly

ATTACH THE DISPLAY HARNESS

1. Choose the correct display harness and plug the 25-pin connector of the display harness(10) into the display. **Note:** the display harness should route toward the windshield.
2. Hand-tighten the locking screws of the connector to keep it in place.
3. Route the harness along the back of the dashboard to the "A" pillar of the cab.
4. Secure the harness every 3 in. with a cable tie or P-clip to prevent pinching or chafing.

INSTALL THE CB MOUNT (OVERHEAD)

INSTALLATION TIP: The IR sensor (camera) and wiring should be routed away from any onboard communication system radio antenna and associated wiring. This includes CBs (Citizen Band Radios), Amateur Radio, or commercial two-way radios. To minimize possible interference from communication system transmission, locate the camera the furthest distance possible from any antenna. Likewise, route XVision® camera wiring away from CB antenna wires to minimize cross talk.

NOTE: The CB mount installation instructions include the use of a CB mount template. However, the template is only designed to be used when mounting the bracket feet so they face each other. The bracket feet can also be installed pointing outward, away from one another. If you choose to mount the feet outward, do not use the CB mount template. Follow all of the steps below, but disregard the references to the template.

POSITION THE DISPLAY

1. Following proper safety guidelines, start the vehicle and build the system air pressure. Be sure the seat is properly adjusted for the driver.
2. With the driver seated, determine the location on the headliner where the display will not disturb the driver's line of sight.
3. Determine the driver's centerline of sight. Refer to Figure 11 on Page 4.

   NOTE: Sometimes the center of the steering wheel is also the centerline of the driver. Use a plumb bob to transfer the center point from the steering wheel to the headliner.

   If the center of the steering wheel is not the "true" centerline of the driver, use the centerline of the driver's seat.
4. Transfer the driver's centerline to the headliner, where the display will be mounted.

   NOTE: The centerlines of the driver and the display should line up. Refer to figure 11 on page 4.
5. Position the display on the headliner approximately 20 in. away (or as close as possible to 20 in. away) from the driver's eyes.
6. Draw a line indicating the front of the display.
7. Tape the CB mount template to the headliner.

   NOTE: Square the template with the line that was drawn for the mounting. Place the template so that its centerline lines up with the driver's line of sight. Refer to page 11 for the appropriate template.

MOUNT THE DISPLAY

1. Center punch the four holes of the CB mount template.
2. Remove the template.
3. Verify that drilling into the headliner will not interfere with electrical wires, tubing, or support members.
4. Drill four 11/64 in. holes in the headliner.
5. Place the mounting brackets(2) over the holes.

   NOTE: Make sure the brackets are square to the driver.
6. Secure the CB Brackets with the four #10 Plastite® screws(16) provided in the mounting kit.

   NOTE: The mounting bracket(2) feet should be pointed toward each other.
7. Torque the screws to approximately 20 in-lbs.

   NOTE: The torque of the screws depends on the composition and thickness of your headliner. If your truck does not have a plastic headliner, substitute metal machine screws for the Plastite® screws. If the thickness of the headliner is less than 1/8 in., you will need to use additional mounting material or another method of fastening.

INSTALL THE KNOB AND WASHER ASSEMBLY

Follow the **"Install the Knob and Washer Assembly"** procedure on page 5.

ATTACH THE DISPLAY HARNESS

1. Choose the correct display harness and plug the 25-pin connector of the display harness(10) into the display. **Note:** the display harness should route toward the windshield.
2. Hand-tighten the locking screws of the connector to keep it in place.
3. Route the harness along the headliner to the "A" pillar of the cab.
4. Secure the harness every 3 inches with a cable tie or P-clip.

INSTALL THE FRICTION HINGE MOUNT (VISOR)

INSTALLATION TIP: The IR sensor (camera) and wiring should be routed away from any onboard communication system radio antenna and associated wiring. This includes CBs (Citizen Band Radios), Amateur Radio, or commercial two-way radios. To minimize possible interference from communication system transmission, locate the camera the furthest distance possible from any antenna. Likewise, route XVision® camera wiring away from CD antenna wires to minimize cross talk.

ASSEMBLE THE FRICTION HINGE MOUNTING HARDWARE

1. Assemble the magnet by positioning the smaller inside diameter of the conical spring toward the display and the larger diameter side toward the magnet.
2. Attach the magnet to the display with a #6 Plastite® Flat Head screw(8).

   IMPORTANT: Tighten the screw until the magnet is seated, then loosen the screw 1/8 to 1/4 turn. The magnet should still be able to pivot and tilt when attached to the striker assembly.
3. Attach the two friction hinge supports to the bottom of the display with the #4 Threadroll Pan Head screws.

   IMPORTANT: Do not exceed 15 in-lbs when fastening. If 15 in-lbs. are exceeded the screw head will shear off or the standoffs will strip. Taptite® screws will form the threads on the standoffs as they are tightened. If it feels as though the screw is binding, back the screw out slightly and continue to tighten to prevent breakage.

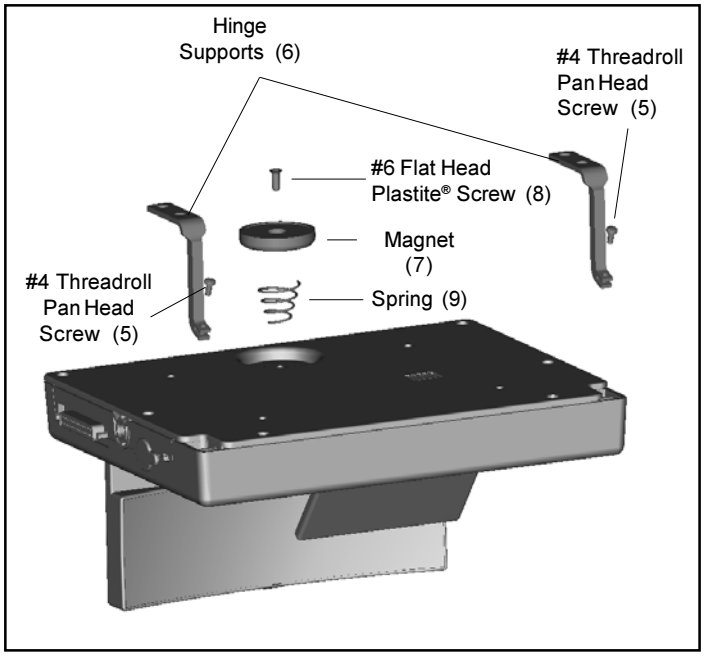

Figure 14 Friction Hinge Mounting Hardware

POSITION THE DISPLAY

1. Fold the sun visor down (toward the windshield).
2. With the driver seated, determine a location in the visor area of the headliner where the mount will not disturb the driver's line of sight or interfere with operation of the sun visor.
3. Determine the driver's centerline of sight. Refer to Figure 11 on Page 4.

   NOTE: Sometimes the center of the steering wheel is also the centerline of the driver. Use a plumb bob to transfer the center point from the steering wheel to the headliner/visor area.

   If the center of the steering wheel is not the "true" centerline of the driver, use the centerline of the driver's seat.
4. Transfer the driver's centerline to the headliner, where the display will be mounted.

   NOTE: The centerlines of the driver and the display should line up.
5. Position the display on the headliner approximately 20 in. away (or as close as possible to 20 in. away) from the driver's eyes. Draw a line indicating the front of the display.
6. Tape the Friction Hinge mount template to the headliner.

   NOTE: Square the template with the line that was drawn along the front edge of the display. Place the template so that its centerline lines up with the driver's line of sight. Refer to page 10 for the appropriate template.

MOUNT THE DISPLAY

1. Center punch the front four holes and the back hole of the template.
2. Remove the template.
3. Verify that drilling into the headliner will not interfere with electrical wires, tubing, or support members.
4. Drill the front four holes with an 11/64 in. drill bit and the single back hole with a 9/64 in. drill bit.
5. Place the mounting brackets over the four front holes. Make sure the brackets are square to the driver and level to the driver's vision.
6. Use a torpedo level to determine if the mount is level. If it is not level, attach the provided shims(17) under the brackets until the mount is level with the driver's line of vision.
7. Secure the Friction Hinge supports(6) to the headliner with the four #10 Plastite® screws(18) provided in the kit.

FRICTION HINGE MOUNT (VISOR) CONT'D

8. Torque the screws to approximately 20 in-lbs.

   NOTE: The torque of the screws depends on the composition and thickness of your headliner. If your truck does not have a plastic headliner, substitute metal machine screws for the Plastite® screws(18). If the thickness of the headliner is less than 1/8 in. you will need to use additional mounting material, or use another method of fastening.

9. Secure the striker plate(21) to the headliner with a #8 plastite flat head screw.
10. Torque the screw to approximately 15 in-lbs.

INSTALL THE STRIKER PLATES ON THE VISOR

After the friction hinge supports have been mounted:

1. Cut the Friction Hinge mount template along the dotted line, as indicated on the template. (The holes along the front of the template will fit around the installed friction hinge supports). With the template in the correct location, mark the location of the striker plate(21).
2. Drill a hole through the center of the marked striker plate location with an 11/64 in. drill bit.

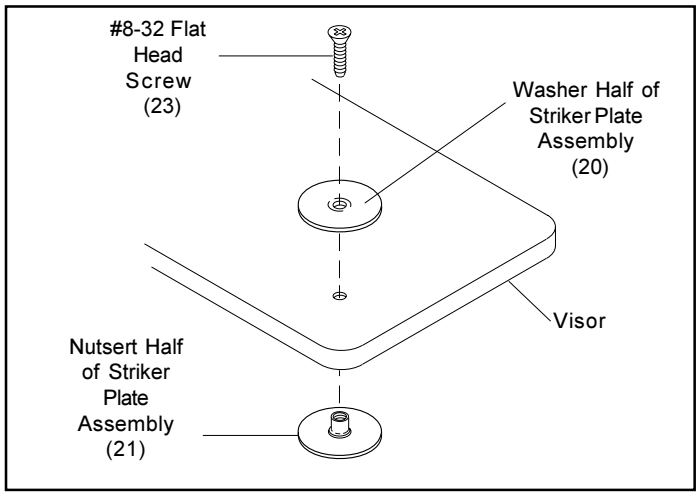

Figure 15 Striker Plate Assembly and Visor

3. Insert the nutsert half of the striker plate assembly through the visor, from the bottom up.
4. Select the appropriate length bolt and thread the #8-32 flat head screw(23) and washer of the assembly into the nutsert from the top of the visor pointing downward.
5. Tighten the screw until snug on the visor.

   NOTE: Do not overtighten the screw and nutsert assembly. The washers should not be squeezed too tightly together.

6. Fold the visor up against the roof of the cab (in its stowed position).
7. Fold the display up so that the magnet(7) contacts the visor.

ATTACH THE DISPLAY HARNESS

1. Choose the correct display harness and plug the 25-pin connector of the display harness(10) into the display. **Note:** the display harnes should route toward the windshield.

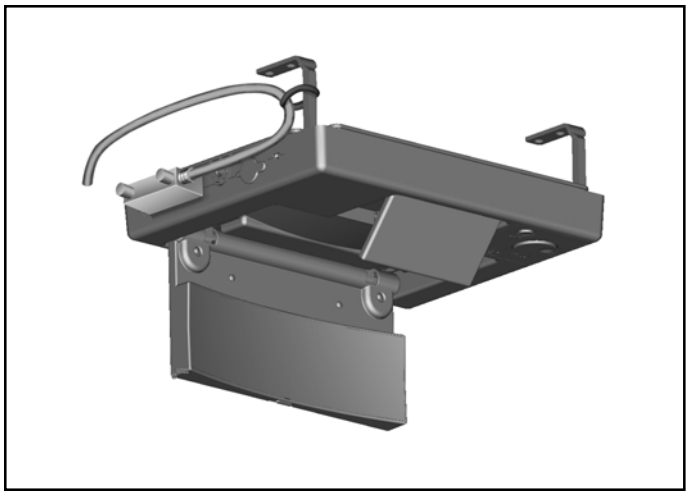

Figure 16 Friction Hinge Mount (Visor) Installed

2. Fasten the harness to the display support with a cable tie.
3. Route the harness back along the headliner to the "A" pillar of the cab.

   NOTE: Make sure to leave enough harness length so that it does not kink or pinch when it pivots.

4. Secure the harness every few inches with a cable tie or P-clip

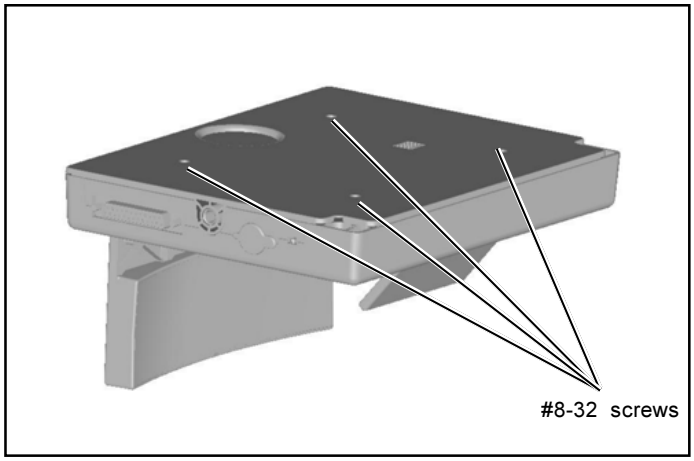

Figure 17 Base #8-32 Mount

INSTALL THE BASE PLATE 8-32 MOUNT

Four # 8-32 inserts are provided in the display base. Refer to Appendix A, Figure 4 for a template that will facilitate the layout and drilling of holes. Use an 11/64 in. bit to drill the four clearance holes. Typically, this installation is used when the display is being recessed, or for custom mounts.

CONNECTING THE HARNESSES

WARNING: Improper installation of the vehicle harness can cause damage to your vehicle's wiring and/or the XVision® system. It is the responsibility of the installer to review wiring and service information for the vehicle and to identify proper locations for connecting the vehicle harness to the power. Many modern vehicles have additional fused accessory power breakouts built into their systems and these breakouts should be used if at all possible.

After installation of the camera and display is complete, all harnesses should be routed to the "A" pillar. At the "A" pillar, both the display harness and camera harness will connect to the vehicle harness. The following steps explain how the harnesses should be installed.

1. Connect the 8-pin connector of the camera harness to the 8-pin connector of the display harness(10).

   NOTE: If the display harness does not reach the camera harness (i.e. they are greater than 6 feet apart), the jumper harness can be used as an "extension" between the two.

   To install the jumper harness, connect the 8-pin connectors to both the display harness and camera harness.

2. Plug the 3-pin connector of the vehicle harness to the 3-pin connector of the display harness.
3. Route the vehicle harness to the fuse panel (The headlamp power may be in a different location other than the fuse panel.)
4. Cut the vehicle harness to an appropriate length.
5. Strip the ends of the three wires of the vehicle harness.
6. According to Table 3, connect the three wires of the vehicle harness to the electrical hook-ups on the vehicle.

   WARNING: Vehicle power and headlight circuits **WILL** be fused. Permanent damage to display and/or camera could occur. Eliminating fuses from circuit will void all warranties.

Table 2 Vehicle Harness Wiring

Vehicle Harness Connector 3 Contacts		Fused	Color
A	Vehicle ignition +12 Volts	3 A slow open fuse (max.)	RED
B	Vehicle ground		BLACK
C	Headlamp active	1 A fast open fuse(max.)	BLUE

   IMPORTANT: When replacing a fuse, it is important to use only the specified fuse with the correct amperage and opening time, listed below. The use of a fuse with a rating other than indicated may result in a dangerous electrical system overload. If a properly rated fuse continues to open, it indicates a problem in the circuit that must be corrected.

7. Fuse the Red wire (A-contact) of the vehicle harness to the ignition bus with a 3 A slow open fuse. See Figure 18.

   WARNING: Use a slow blow fuse with a 3 A maximum.

8. The Blue wire (C-contact) of the vehicle harness must be fused with a 1 A fast open fuse to the headlamp circuit. When the headlamps are on, the Blue wire should have 12 V applied to it. See Figure 18.
9. Connect the Black wire to the vehicle ground bus. See Figure 18.

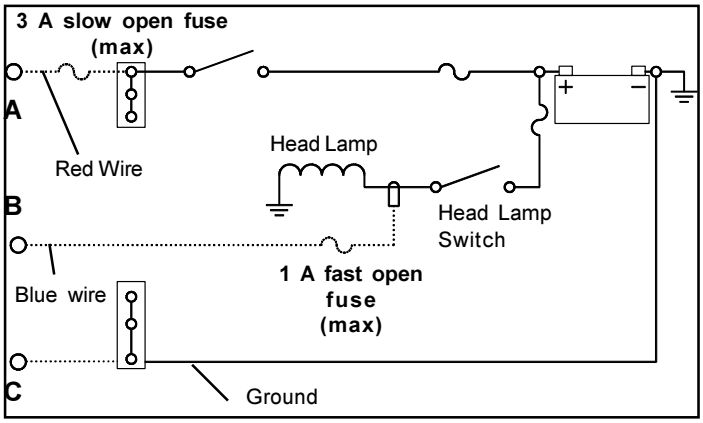

Figure 18 Power Supply Schematic

OPERATING THE XVISION® SYSTEM

Under optimal conditions, the XVision® system will be fully operational within 45 to 60 seconds following power up.

To activate the XVision® system, five conditions must be met:

1. The vehicle must have accessory power on.
2. The vehicle must have its headlights on.
3. The display power button must be in the on position.
4. The notebook must be fully opened.
5. The intensity knob must be turned to a visible intensity.

   NOTE: During warm-up, the Bendix® logo will be displayed on the combiner for approximately 45 seconds.

After the system has warmed up, the combiner will display the image in the driver's forward field of view.

NOTE: This is the appropriate time to set the intensity control. Adjust the intensity level to suit the driver's preference.

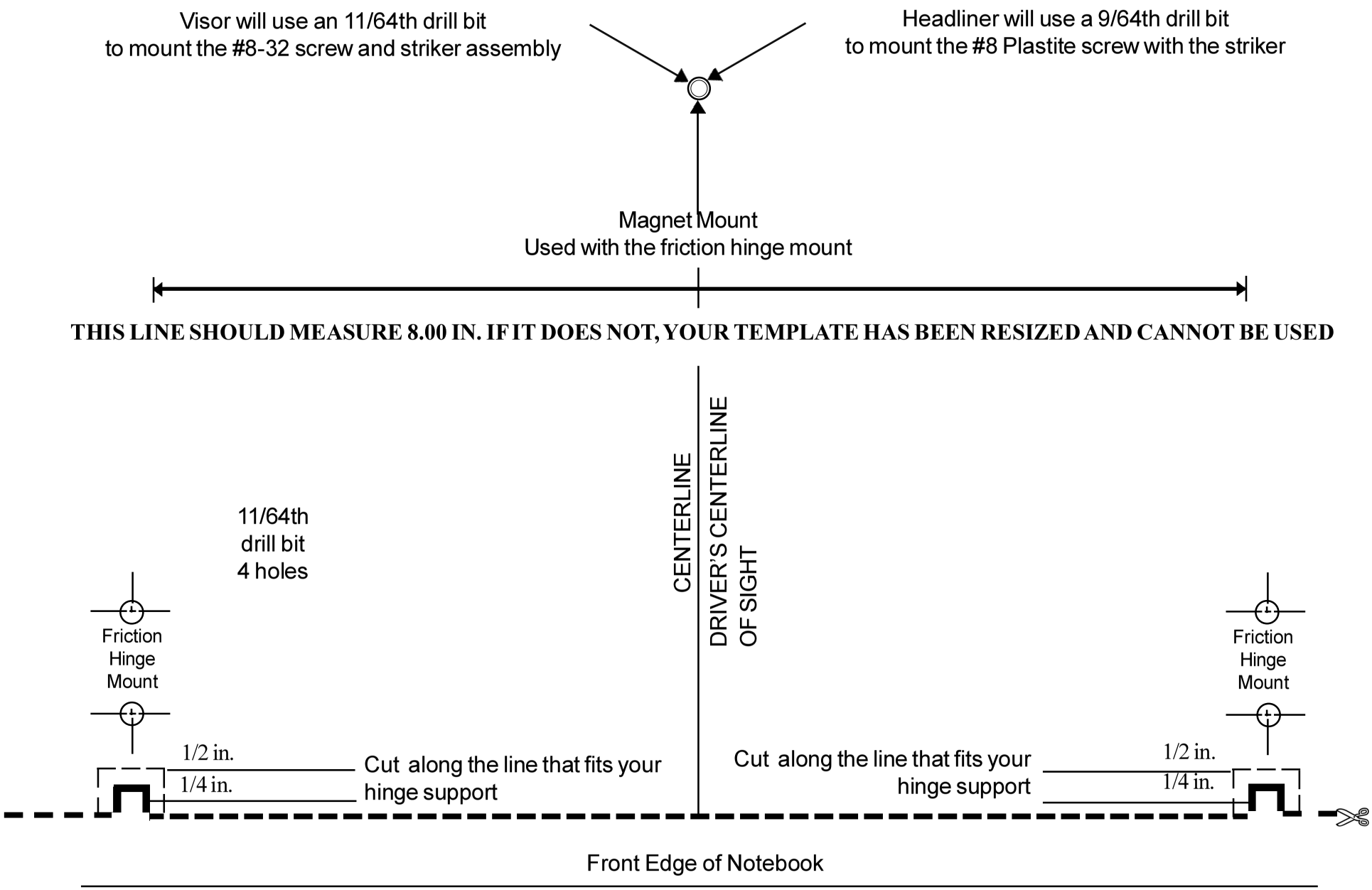

Template 1 Friction Hinge Mount Template

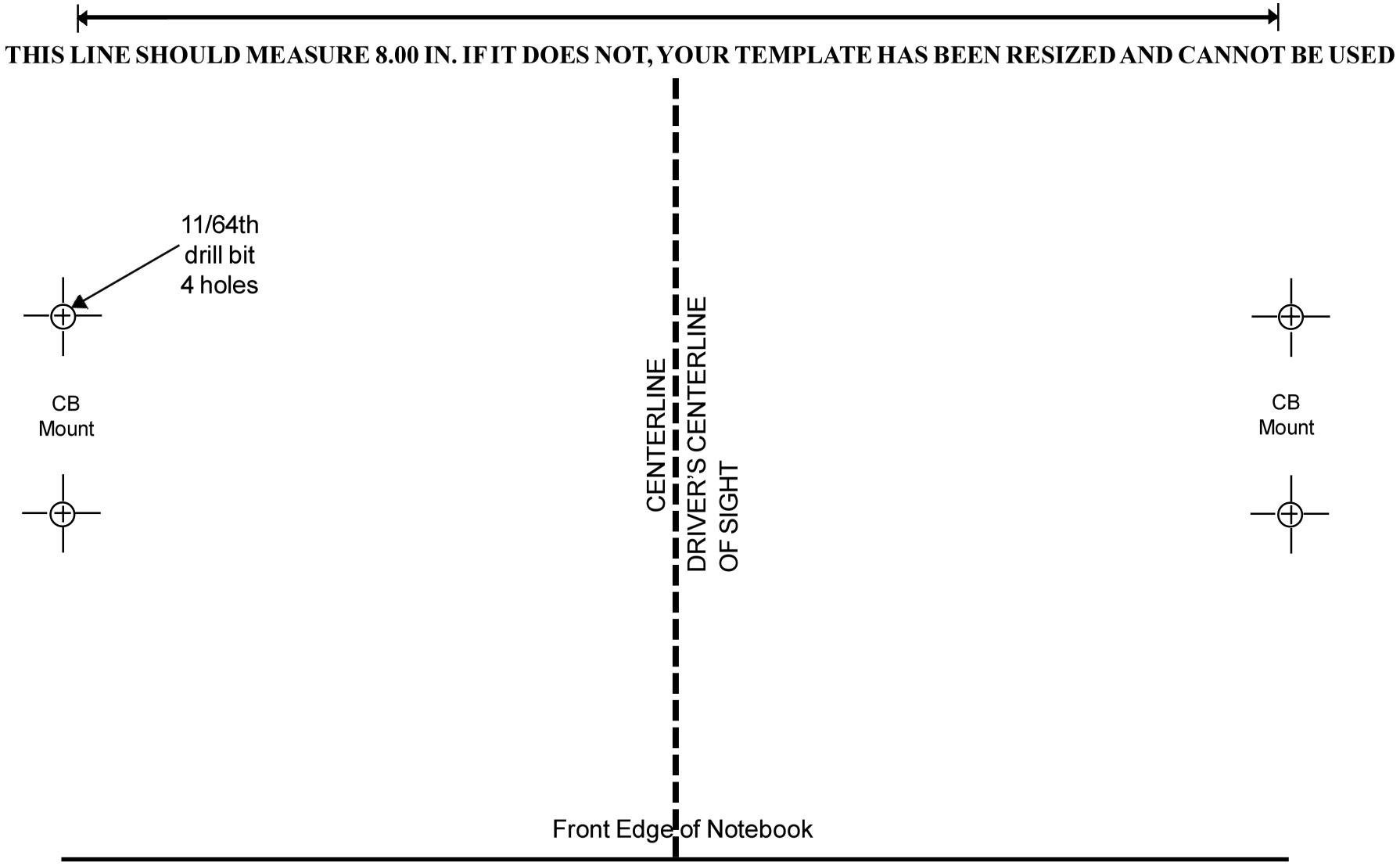

Template 2 CB Mount Template

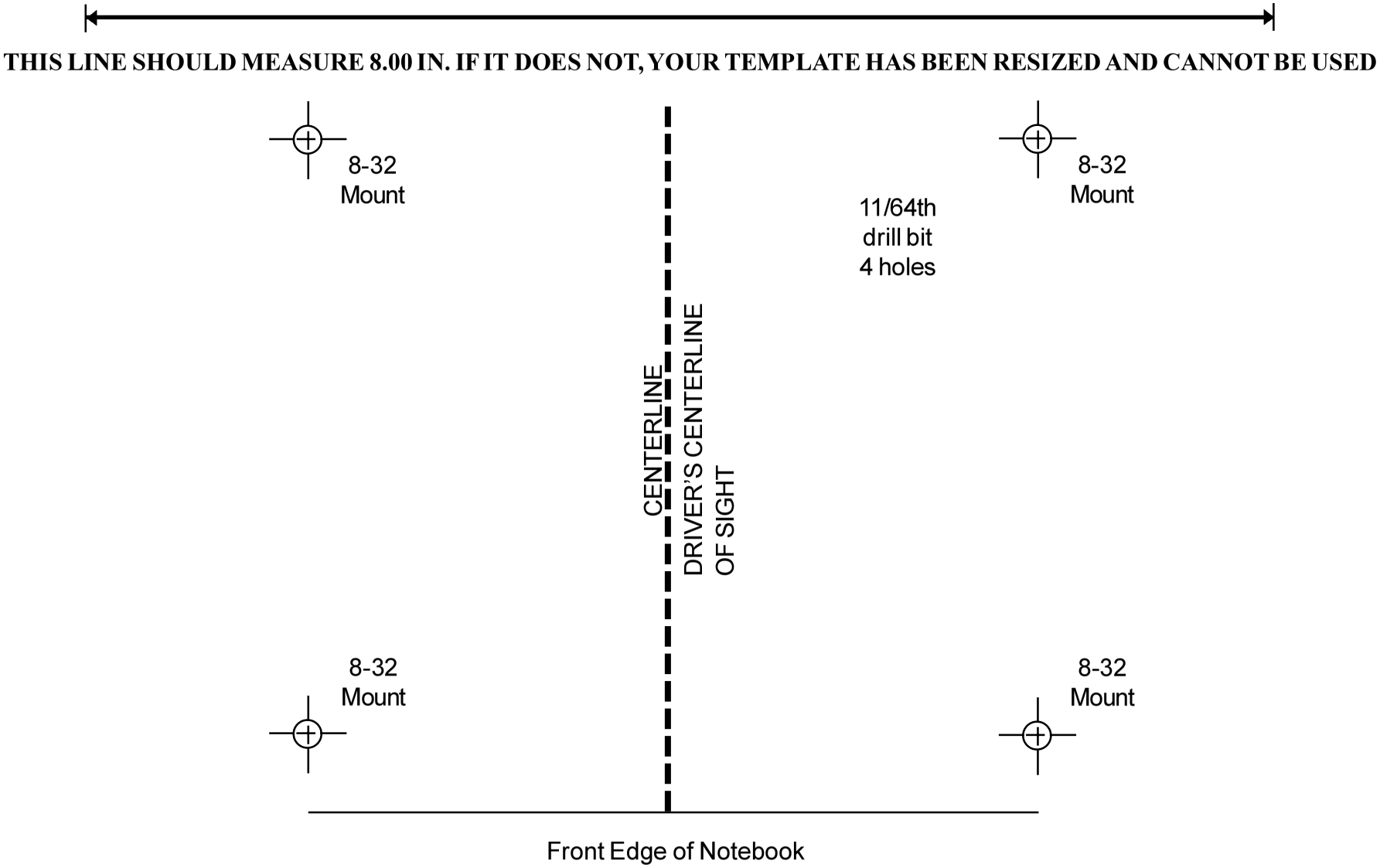

Template 3 8-32 Mount Template